LOT # 2 (D) HOSHAB

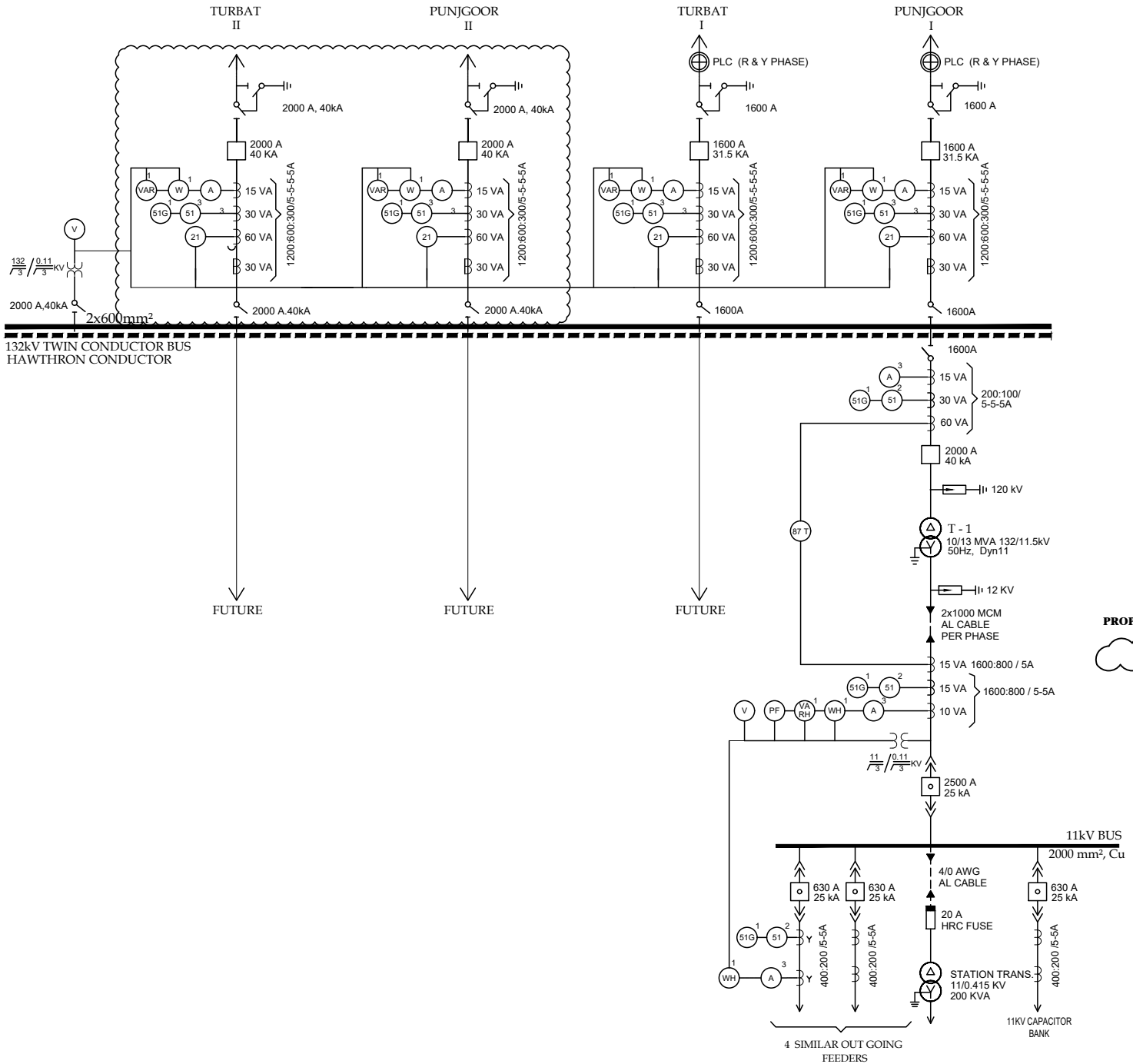

LEGEND :-

- ISOLATOR
- EARTHING BLADE
- POWER CIRCUIT BREAKER
- DRAW OUT TYPE CIRCUIT BREAKER
- CURENT TRANSFORMER
- POTENTIAL TRANSFORMER
- LIGHTNING ARRESTOR
- POWER CABLE
- TWO WINDING TRANSFORMER
- PLC EQUIPMENT
- RELAY (NO IN SYMBOL INDICATES FUNCTION)

51	OVER CURRENT RELAY
51G	EARTH FAULT RELAY
21	DISTANCE RELAY
87 T	DIFFERENTIAL RELAY
A	AMMETER
W	WATT METER
VAR	VAR METER
V	VOLT METER
VARH	VAR HOUR METER
WH	WATT HOUR METER
	HRC FUSE
PF	POWER FACTOR METER
64	RESTRICTED EARTH FAULT RELAY

PROPOSED:

NOTE:

1. **PREPARED FROM WAPDA S/L DRAWING NO. PDW/TE - 1024 DT 03-04-1989 .**
2. **FOR EARLIER REVISIONS REFER TO WAPDA GLO DWG NO PDW/TS - 3831 DT. 03-04-1989.**

NO.	DATE	REVISION	BY
1	17-01-20	ADDED 2 NO. 132kV LINE BAYS (1 FOR PANJGOOR G/S, 1 FOR TURBAT G/S), CONVERSION OF 132kV BUS INTO TWIN BUNDLE CONDUCTOR.	EnMasse

CLIENT:- QESCO

CONSULTANT :- EnMasse

EXISTING: 2 NO. 132kV LINE BAYS, 1 NO. 10/13MVA, 132/11.5kV T/F BAY.

NAME	SIG.
PREPARED	MM
CHECKED	HA
APPROVED	CAL

TITLE :- **132kV HOSHAB GRID SUB-STATION SINGLE LINE DIAGRAM**

SCALE:- N T S | DRG NO. SLD-004 | DATE: